THE USER-FRIENDLY TURNING CENTER FAMILY

PUMA DNT

2100 · 2600

DN SOLUTIONS

PUMA DNT 2100 · 2600

The PUMA DNT Series is an 8- and 10-inch turning center family that is equipped with the most powerful spindle in its class. Alongside that is an innovative tool post concept that guarantees powerful, precise machining and exceptional productivity. The machine's design allows for convenient operation and easy maintenance.

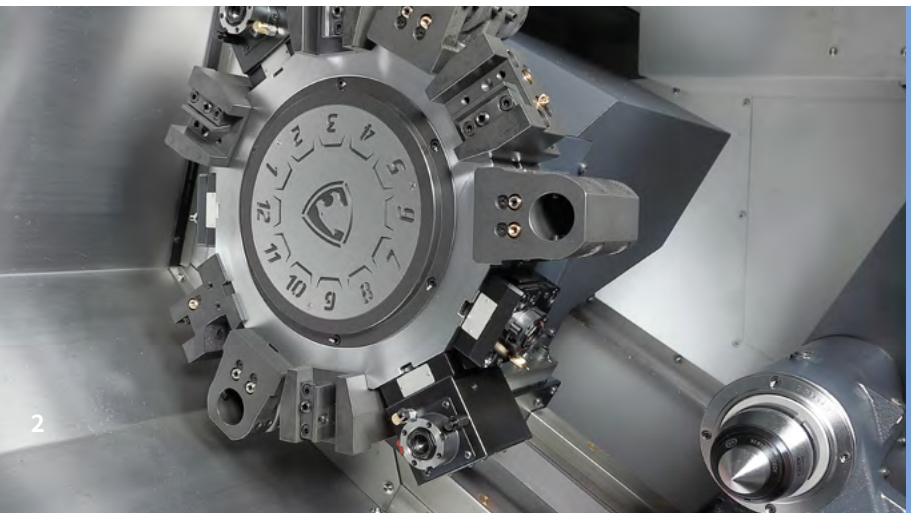

Sample

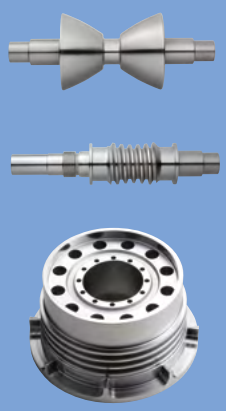

HIGH RIGIDITY

With a box guideway structure and impressive spindle power, the PUMA DNT brings stability to its impressive cutting capabilities.

IMPROVED USABILITY

An adjustable operator's panel, quill detection sensor and iHMI touch capability combine to give the PUMA DNT a top-of-the-line user experience.

HIGH ACCURACCY

An optimized spindle structure and optional thermal compensation gives the PUMA DNT pinpoint accuracy, allowing you to produce the right parts the first time.

BASIC STRUCTURE

Box guideways are applied to all axes to prevent vibration, ensure dynamic rigidity and deliver powerful and precise machining.

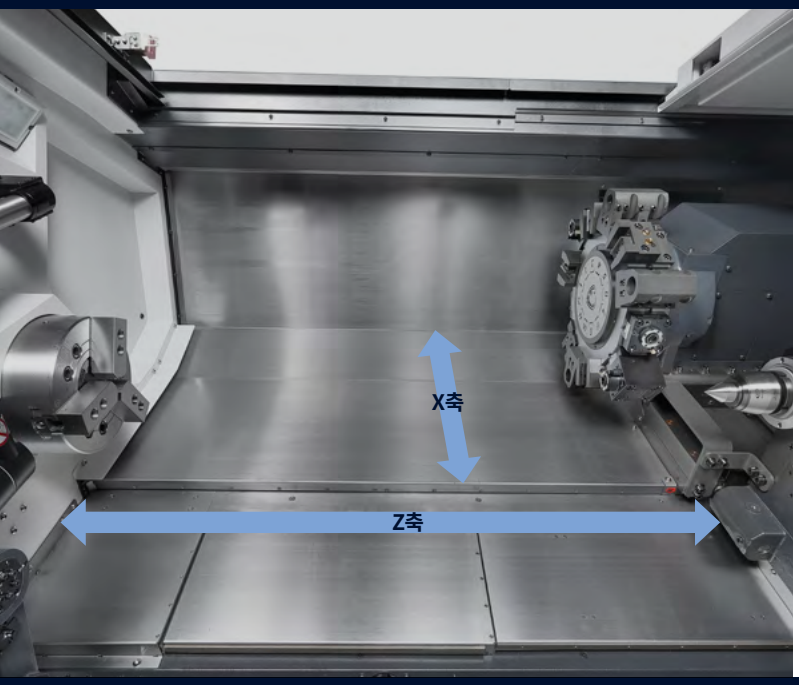

Models	Standard chuck size (inch)	Travel (mm(inch))		Rapid traverse rate (m/min (ipm))	
		X-axis	Z-axis	X-axis	Z-axis
PUMA DNT2100/M	8"	230 (9.1)	580 (22.8)	24 (9944.9)	30 (1181.1)
PUMA DNT2100B/MB	10"				
PUMA DNT2600/M	10"	260 (10.2)	680 (26.8)		
PUMA DNT2600L/LM	10"		1100 (43.3)		

MACHINING AREA

PUMA DNT Series machines have the largest machining areas in their class, delivering maximum productivity with minimal cost.

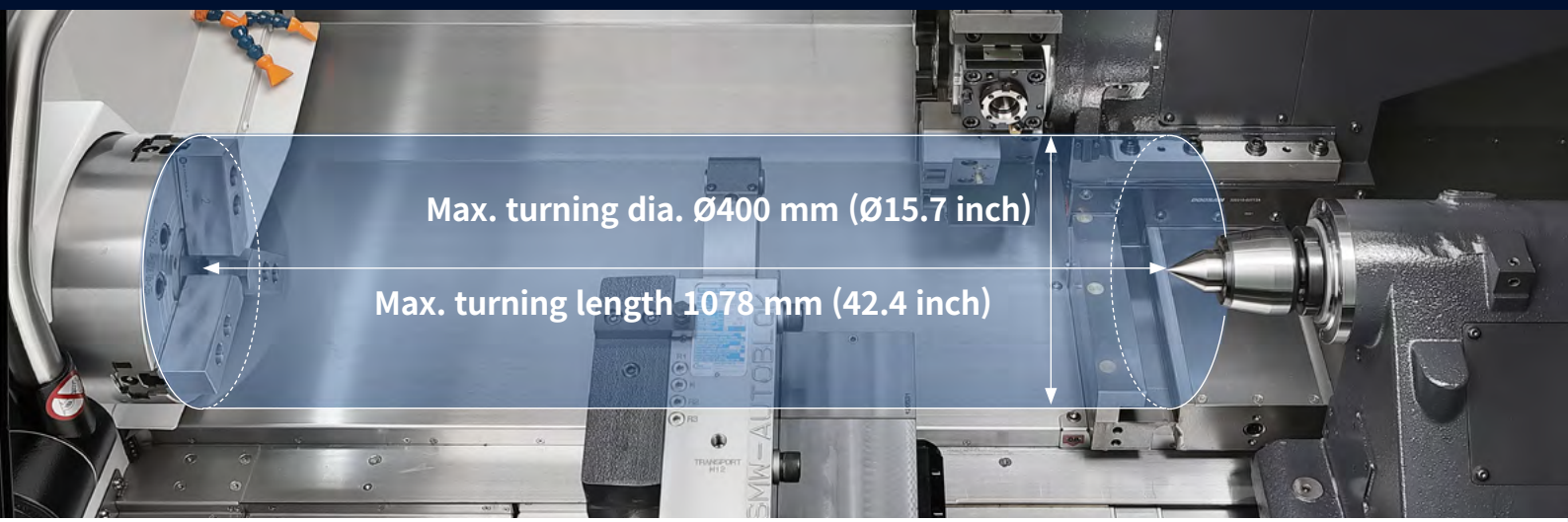

Units : mm (inch)

Models	Bar working diameter	Max. turning diameter	Max. turning length
PUMA DNT2100	Ø67 (Ø2.6)	400 (15.7)	562 (22.1)
PUMA DNT2100M		320 (12.6)	513 (20.2)
PUMA DNT2100B	Ø81 (Ø3.2)	400 (15.7)	550 (21.7)
PUMA DNT2100MB		320 (12.6)	501 (19.7)
PUMA DNT2600		460 (18.1)	658 (25.9)
PUMA DNT2600M		380 (15.0)	610 (24.0)
PUMA DNT2600L		460 (18.1)	1078 (42.4)
PUMA DNT2600LM		380 (15.0)	1030 (40.6)

** Max. turning dia. and length is based on BMT55P. If you select the other turret type, Max. turning dia. and length is changed. Please contact the salesperson.*

SPINDLE

A low inertia spindle improves acceleration/deceleration rates while increasing productivity and delivering powerful cutting performance.

Max. spindle speed

PUMA DNT2100

4500{Built-in 5000 OPTION} r/min

Max. spindle power

PUMA DNT2600

26 kW 34.9 Hp

Max. spindle torque

PUMA DNT2600

735 N·m 542.4 ft-lbs

Models	Spindle speed (r/min)	Power (kW(Hp))	Torque (N·m (ft-lbs))
PUMA DNT2100/M	4500	18.5/15 (24.8/20.1)	328 (242.1)
PUMA DNT2100M (Built-in) OPTION	5000	18.5/15 (24.8/20.1)	326 (240.6)
PUMA DNT2100B/MB	3500	18.5/15 (24.8/20.1)	403 (297.4)
PUMA DNT2600/M	3500	26/18.5 (20.1/34.9)	735 (542.4)
PUMA DNT2600L/LM			

TAILSTOCK

A highly-rigid tailstock is used to support the machining of long and thin workpieces.

Manual

Programmable/Hydraulic OPTION

Servo driven OPTION

Models	Tailstock center (Live)	Tailstock travel mm (inch)
PUMA DNT2100/M	MT #4	580 (22.8)
PUMA DNT2100B/MB		
PUMA DNT2600/M	MT #5	680 (26.8)
PUMA DNT2600L/LM		1100 (43.3)

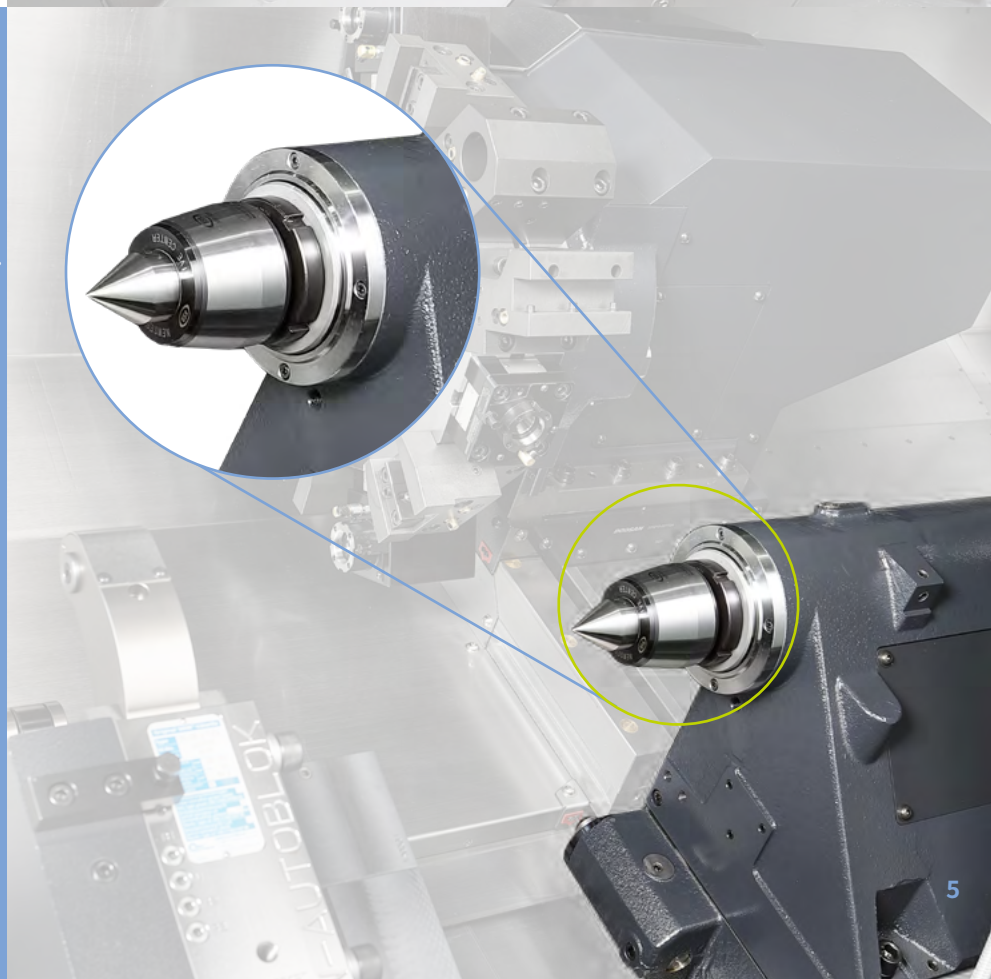

TURRET

Turret rotation is controlled by a servo motor for prompt and correct selection of tools.
The milling turret, including rotary tools, features remove BMT design for higher rigidity.
DN Solutions ensures best-in-class milling, drilling and tapping.

2 axis turret

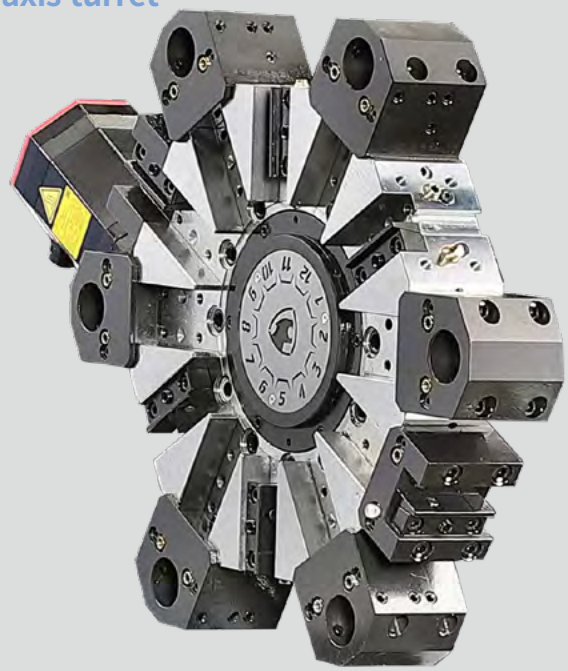

BMT55P

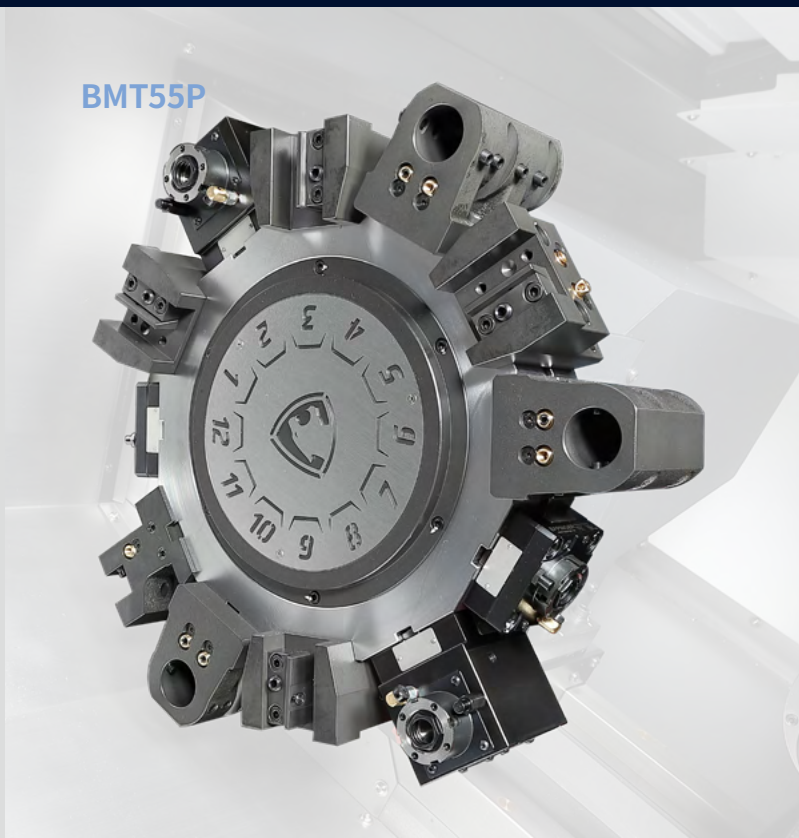

Number of tool stations

PUMA DNT2100/**DNT**2600

10/12 st.

BMT milling turret

BMT55P

BMT65P OPTION

Rotary tool motor power

BMT55P/BMT65P

5.5 kW 7.4 Hp

Rotary tool speed

BMT55P

6000 r/min

10000 r/min OPTION

		PUMA DNT2100	PUMA DNT2100B	PUMA DNT2600/L	Notes
Number of tool station	12 st.	●	○	○	-
	10 st.	○	●	●	-

		PUMA DNT2100M	PUMA DNT2100MB	PUMA DNT2600M/LM	Notes
Number of tool station	12 st.	●	●	●	-
	12 st.(24 position)	○	○	○	-
BMT	BMT55P	●	●	●	12 st./12 st. (24 position) selectable
	BMT65P	○	○	○	12 st.
Rotary tool	6000 r/min/5.5kW (BMT55P)	●	●	●	12 st./12 st. (24 position) selectable
	10000 r/min/7.5kW (BMT55P)	○	○	○	12 st./12 st. (24 position) selectable
	5000 r/min/5.5kW (BMT65P)	○	○	○	12 st.

STANDARD | OPTIONAL SPECIFICATIONS

A range of options is available to suit individual requirements.

Description	Feature	PUMA DNT2100	PUMA DNT2100M	PUMA DNT2100B	PUMA DNT2100MB	PUMA DNT2600/L	PUMA DNT2600M/LM
Chuck	8 inch	●	●	-	-	-	-
	10 inch	○	○	●	●	●	●
	12 inch	-	-	-	-	○	○
	Non-chuck	○	○	○	○	○	○
Jaw	Soft jaw	●	●	●	●	●	●
	Hard jaw	○	○	○	○	○	○
Spindle	Standard	●	●	●	●	●	●
	High torque	○	○	-	-	-	-
	Built-in	○	○	-	-	-	-
Turret	10ST	○	-	●	-	●	-
	12ST	●	-	○	-	○	-
	12ST_BMT55P_6,000 r/min	-	●	-	●	-	●
	12ST_BMT55P_10,000 r/min	-	○	-	○	-	○
	12ST(24 POSITION)_BMT55P_6,000 r/min	-	○	-	○	-	○
	12ST(24 POSITION)_BMT55P_10,000 r/min	-	○	-	○	-	○
	12ST_BMT65P_5,000 r/min	-	○	-	○	-	○
Chucking option	DUAL PRESSURE CHUCKING	○	○	○	○	○	○
	CHUCK CLAMP CONFIRMATION	○	○	○	○	○	○
	PRESSURE SWITCH FOR CHUCKING PRESSURE CHECK	○	○	○	○	○	○
Steady rest	Hydraulic	○	○	○	○	○	○
	Programmable	○	○	○	○	○	○
	Manual	○	○	○	○	○	○
	V stand V stand for shaft workpiece	○	○	○	○	○	○
Tailstock	Hydraulic	●	●	●	●	●	●
	Programmable	○	○	○	○	○	○
	Servo driven	○	○	○	○	○	○
	Non-tailstock	○	○	○	○	○	○
	Live center(MT#4)	●	●	●	●	●	●
	Dead center(MT#3)	○	○	○	○	○	○
Coolant pump	1.5 bar	●	●	●	●	●	●
	Increase power (4.5/7/10/14.5/20/70 bar)	○	○	○	○	○	○
	add coolant pump(for option) 4.5 bar	○	○	○	○	○	○
Coolant options	Oil skimmer	○	○	○	○	○	○
	Coolant chiller	○	○	○	○	○	○
	Coolant pressure switch	○	○	○	○	○	○
	Coolant level switch	○	○	○	○	○	○
	Chuck coolant	○	○	○	○	○	○
	Coolant gun	○	○	○	○	○	○
Chip disposal options	Side type chip conyeyor	○	○	○	○	○	○
	Rear type chip conyeyor	○	○	○	○	-	-
	Chip bucket	○	○	○	○	○	○
	Chip aire blower	○	○	○	○	○	○
	Mist collector interface	●	●	●	●	●	●
	Integrated mist collector	○	○	○	○	○	○
Measuring & Automation	Tool setter (Manual)	○	○	○	○	○	○
	Tool setter (Automatic)	○	○	○	○	○	○
	Tool setter(Removable)	○	○	○	○	○	○
	Part catcher with parts box	○	○	○	○	○	○
	Part catcher with parts conyeyor	○	○	○	○	○	○
	Auto door	○	○	○	○	○	○
	Bar feeder interface	○	○	○	○	○	○
Others	Tool load monitoring system	○	○	○	○	○	○
	Linear scale (X/Z)	○	○	○	○	○	○
	Signal tower	○	○	○	○	○	○
	Air gun	○	○	○	○	○	○
	Automatic Power off	○	○	○	○	○	○
	Thermal compensation(sensor type)	○	○	○	○	○	○
	Sketch turn S/W	○	○	○	○	○	○
	Top protection cover	○	○	○	○	○	○
	Tool kit(l-lench/spanner)	○	○	○	○	○	○
Customized special options	Tsc for main spindle_preparation	○	○	○	○	○	○
	Chuck pressure switch	○	○	○	○	○	○
	Automatic top door	○	○	○	○	○	○
	Guide way wiper_for dry cutting	○	○	○	○	○	○
	Coolant shower	○	○	○	○	○	○
	Workpiece measuring system	○	○	○	○	○	○
	Quick change tooling (CAPTO)	○	○	○	○	○	○

※ Please contact your DN Solutions representative for detailed machine information.
** When using a semi-synthetic type or synthetic type, contact our sales representative or service center in advance.*

● standard features ○ option △ Pre-discussion is required X Not available

Fire Safety Precautions | There is a high risk of fire when using non-water-soluble cutting fluids, processing flammable materials, neglecting the controlled and careful use of coolants and modifying the machine without the consent of the manufacturer. Always check the SAFETY GUIDELINES carefully before using the machine.

PERIPHERAL EQUIPMENT

Chip conveyor OPTION

DN Solutions provides the chip conveyor with an inverter that can be speed-adjusted. By selecting the correct type of conveyor, the efficiency of the machine is increased.

Chip conveyor type	Material	Description
Hinged belt	Steel	Most common type of chip conveyor. Appropriate for steel materials generating chips with a length of 30mm or more.
Magnetic scraper	Cast iron	Chip conveyor with magnetic scraper. Appropriate for cast iron workpieces generating fine chips

Coolant system

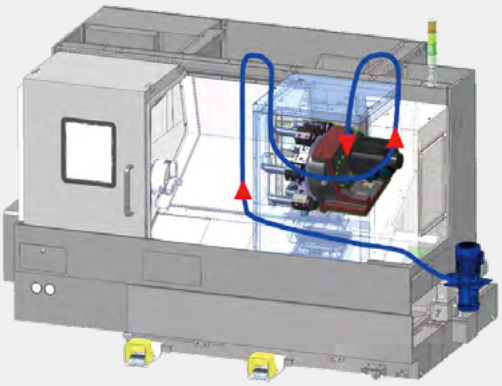

Coolant pump	Output pressure (bar)		Filter	Std./Opt.
	60Hz	50Hz		
pump1	1.5	1.2	Screen filter	std.
pump2	4.5	3		opt.
pump3	7	4.7		
pump4	10	7		
pump5	14.5	10		
pump6	20	20		
pump7	70	70	Dual bag filter	

Coolant chiller (recommended) OPTION

A coolant chiller is recommended to help prevent temperature rises and to reduce thermal deformation when using a water-insoluble coolant or high-pressure coolant system (i.e., power over 1.5kW).

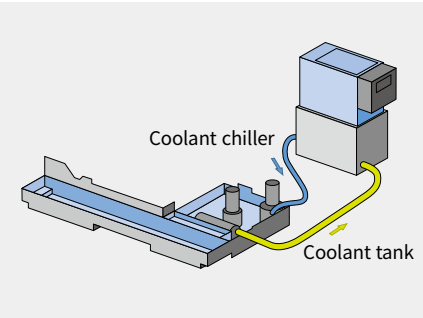

Tailstock chip flushing OPTION

Chip remover with coolant around the tailstock.

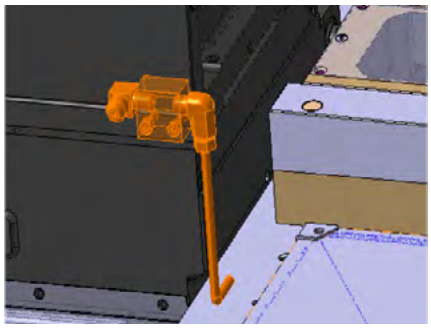

Oil skimmer OPTION

The oil skimmer keeps coolant and lubricant separate from each other and extends the life cycle of the coolant.

PERIPHERAL EQUIPMENT

Adjustable operation panel

Can be adjusted up and down in 3 steps. So anyone can operate conveniently, even if operators change frequently.

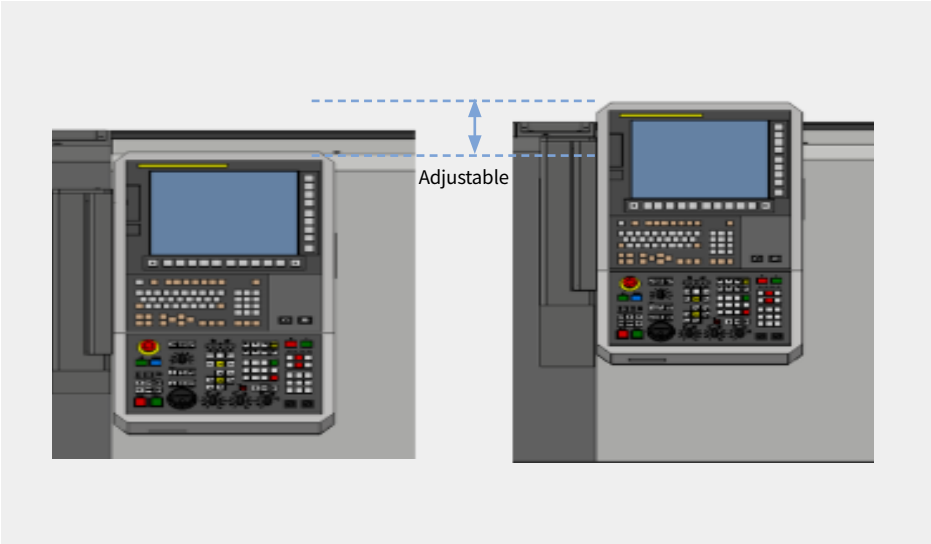

Tool setter OPTION

The tool setter facilitates the setting of tools and the fast and precise measurement of abraded tools

Quick change CAPTO OPTION

The CAPTO system simplifies tool change operations. It is recommended for users who need to change tools frequently or significantly reduce set-up times.

Servo tailstock OPTION

Moves independently from any other units, reducing cycle time. The servo type tailstock can drill* the workpiece.

**Drill function is an optional extra.*

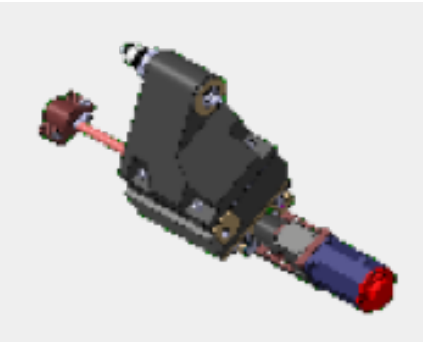

Steadyrest OPTION

The user can machine the short length workpiece without removing the steadyrest.

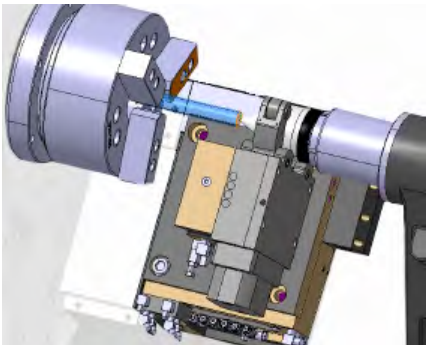

Servo type auto door OPTION

Reduce cycle times by setting the stop position and controlling the speed.

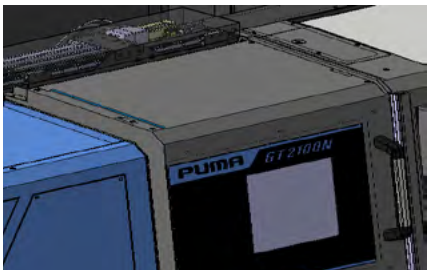

Mist collector OPTION

The mist collector absorbs airborne oil vapor and fine dust particles in the system to improve the working environment.

Linear scale (X/Z-axis) OPTION

Linear scales are available for all axes and deliver increased accuracy.

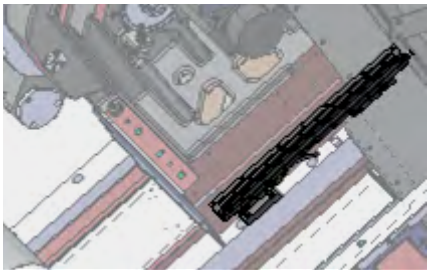

Parts catcher OPTION

Automatically catches finished parts and transfers them securely to downstream processes.

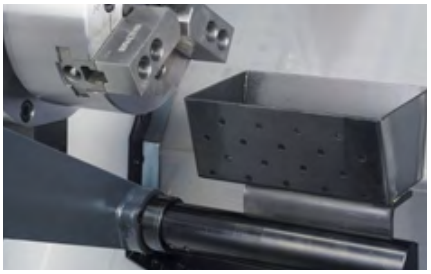

DN SOLUTIONS FANUC i PLUS

DN Solutions Fanuc i Plus maximizes productivity and convenience.

15” Screen + New OP

DN Solutions Fanuc i Plus’ operation panel enhances operating convenience by incorporating common-design buttons and layout. It features a Qwerty keyboard for fast and easy data input and operation.

DN Solutions Fanuc i Plus

- 15-inch color display
- Intuitive and user-friendly design

USB and PCMCIA card QWERTY Keyboard

- EZ-guide i standard
- Ergonimic operator panel
- 2MB Memory
- Hot keys

iHMI touchscreen

iHMI provides an intuitive interface that uses a touchscreen for quick and easy operation.

Range of applications

Suitable for various applications related to planning, machining, improvement and utility.

SKETCH-TURN

DN Solutions conversational programming software for PC

- Easy to learn for beginners
- Time savings in programming
- Reduce processing cycle time

FANUC

Division	Item	Specifications	2-Axis	M
			DN Solutions Fanuc i Plus	DN Solutions Fanuc i Plus
Controlled axis	Controlled axes		2(X,Z)	3(X,Z,C)
	Simultaneously controlled axes		2 axes	3 axes
Data input/output	Fast data server		○	○
	Memory card input/output		●	●
	USB memory input/output		●	●
	Larger capacity memory_2GB		○	○
Interface function	Embedded Ethernet		●	●
	Fast Ethernet		○	○
	Enhanced Embedded Ethernet function		●	●
Operation	DNC operation	Included in RS232C interface.	●	●
	DNC operation with memory card		●	●
Program input	Workpiece coordinate system	G52 - G59	●	●
Feed function	AI contour control I	G5.1 Q_, 40 Blocks	○	○
	AI contour control II	G5.1 Q_, 200 Blocks	○	○
Operation Guidance Function	EZ Guidei (Conversational Programming Solution)		●	●
	iHMI with Machining Cycle		●	●
	EZ WORK		●	●
Setting and display	CNC screen dual display function		●	●
Network	FANUC MTConnect		✪	✪
	FANUC OPC UA		✪	✪
Others	Display unit	15" color LCD	X	X
		15" color LCD with Touch Panel	●	●
	Part program storage size & Number of registerable programs	640M(256KB)_500 programs	X	X
		5120M(2MB)_1000 programs	●	●

Network: FANUC MTConnect and FANUC OPC UA available.

● *Standard* ○ *Optional* X *N/A* ✪ *Available*

DN SOLUTIONS FANUC i PLUS

EZ-Guide i

Using the DN Solutions EZ-Guide i, users can create a cutting program for any desired shape, including patterns, by entering just the dimensions.

EXAMPLE PROGRAMMING : CUTTING SHAPE

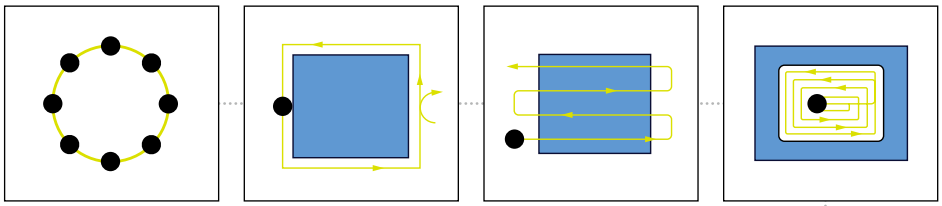

EXAMPLE PART

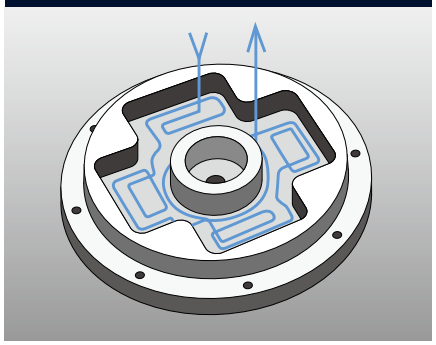

EZ-GUIDE i SCREEN

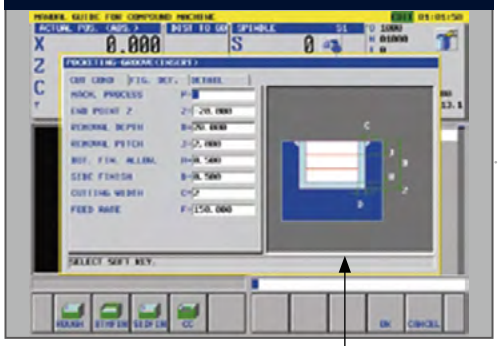

Enter the dimensions of the shape

AUTOMATIC CREATION OF CUTTING PROGRAM

```
O7000 (SAMPLE PROGRAM) ;
...
M3 S1500 ;
G0 X50. Y125. ;
G0 Z30. ;
G1040 T0.5 J3. H0.2 K0.5 ... ;
G1020 H120. V50. U37. W68. ... ;
G0 Z80. ;
M5 ;
```

A cutting program is automatically created with the entered values.

EZ Work

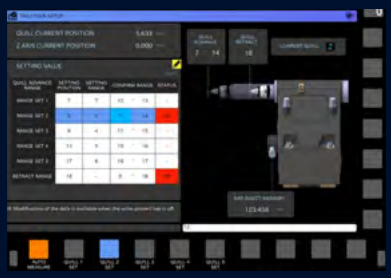

Tailstock quill position detection function

The user can set the tailstock position minutely with sensor. This fuction is able to recall the positions that the user had set. It can reduce the setting time.

Programming

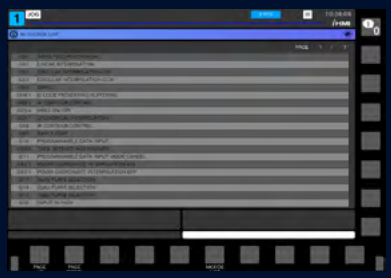

G code / M code

The user can check the explanation of G code and M code in EZ Work.

Workpiece setting OPTION

By measuring the position of the workpiece, the user sets the offset manually or automatically.

Operation / Maintenance

Tool load monitoring

During cutting, abnormal load caused by wear or damage of the tool is detected and an alarm is triggered to prevent further damage.

Thermal compensation OPTION

Sensors check and calculate the displacements and compensate it beforehand.

Work management

Capability of checking operation hours of the system, and quantity of finished workpieces.

POWER | TORQUE

MAIN SPINDLE

PUMA DNT2100/M

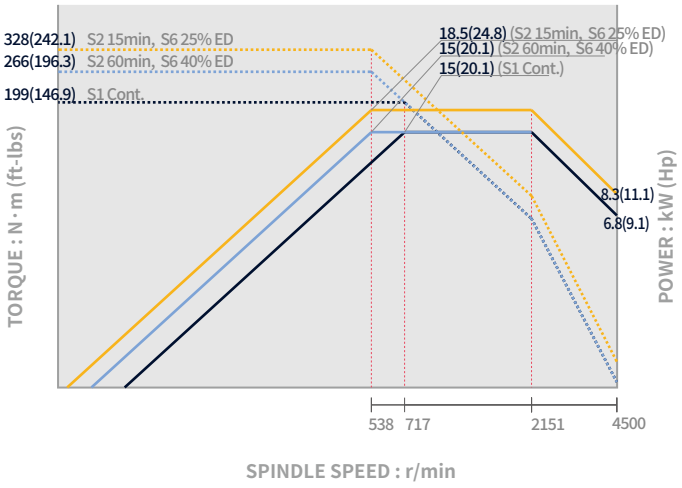

PUMA DNT2100/M (High Torque) OPTION

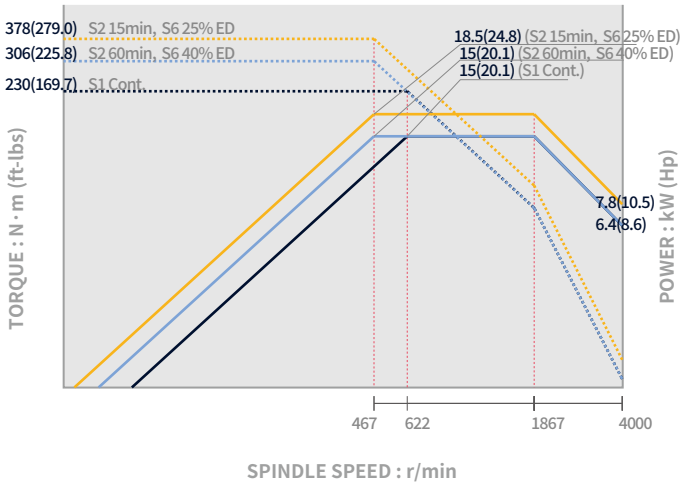

PUMA DNT2100B/MB

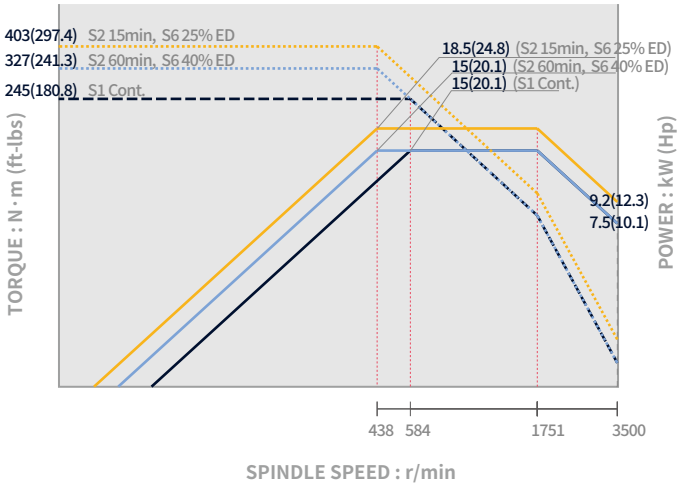

PUMA DNT2600/M/L/LM

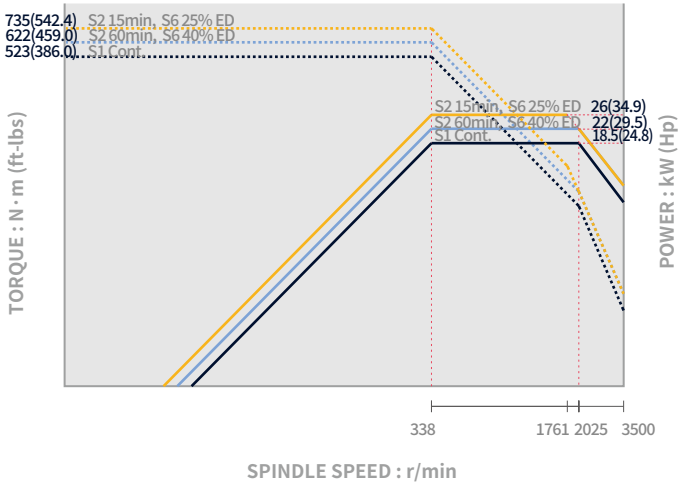

PUMA DNT2100/M (Built-in) OPTION

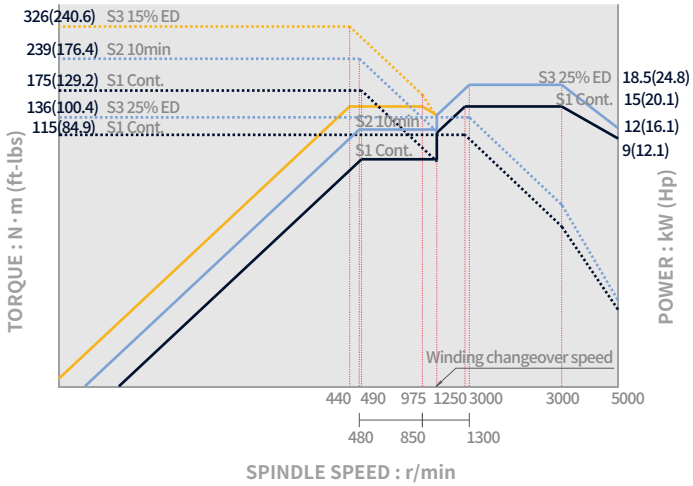

POWER | TORQUE

ROTARY TOOL_PUMA DNT2100 M/2100MB/2600M/2600LM

BMT55P / 6000 r/min

Max. spindle speed : **6000** r/min

Max. spindle power : **5.5** kW

Max. spindle torque : **42** N · m

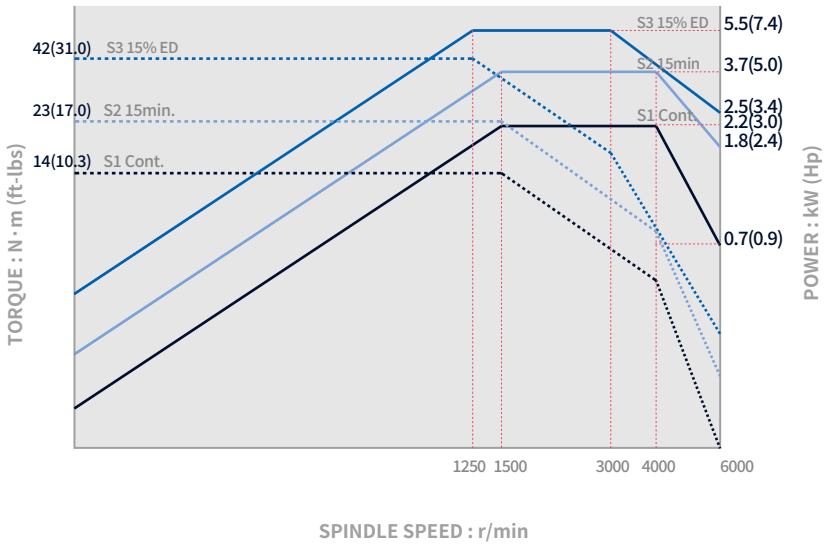

BMT55P / 10000 r/min

Max. spindle speed : **10000** r/min

Max. spindle power : **7.5** kW

Max. spindle torque : **23.9** N · m

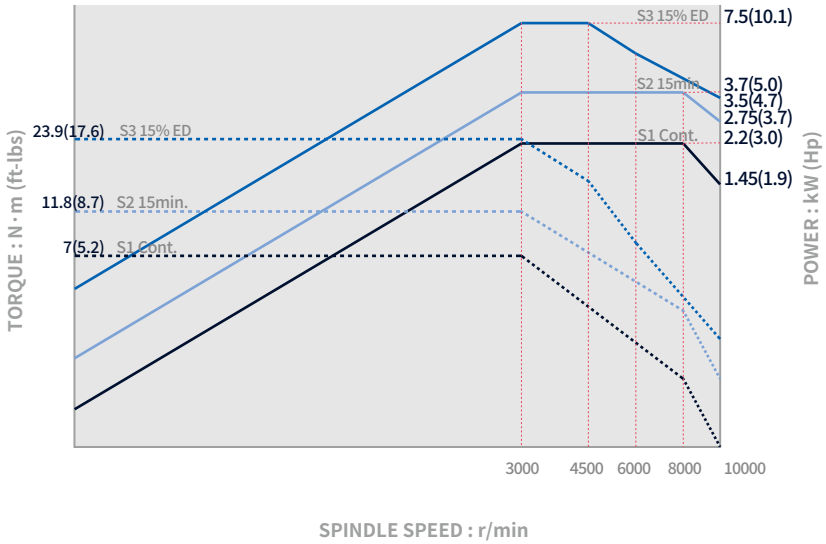

BMT65P / 5000 r/min

Max. spindle speed : **5000** r/min

Max. spindle power : **5.5** kW

Max. spindle torque : **70** N · m

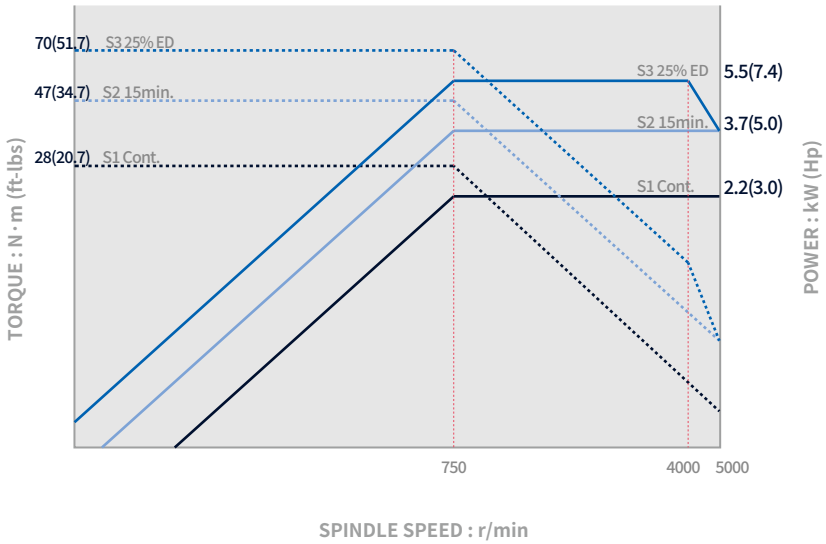

EXTERNAL DIMENSIONS

PUMA DNT2100/2600/2600L series

TOP

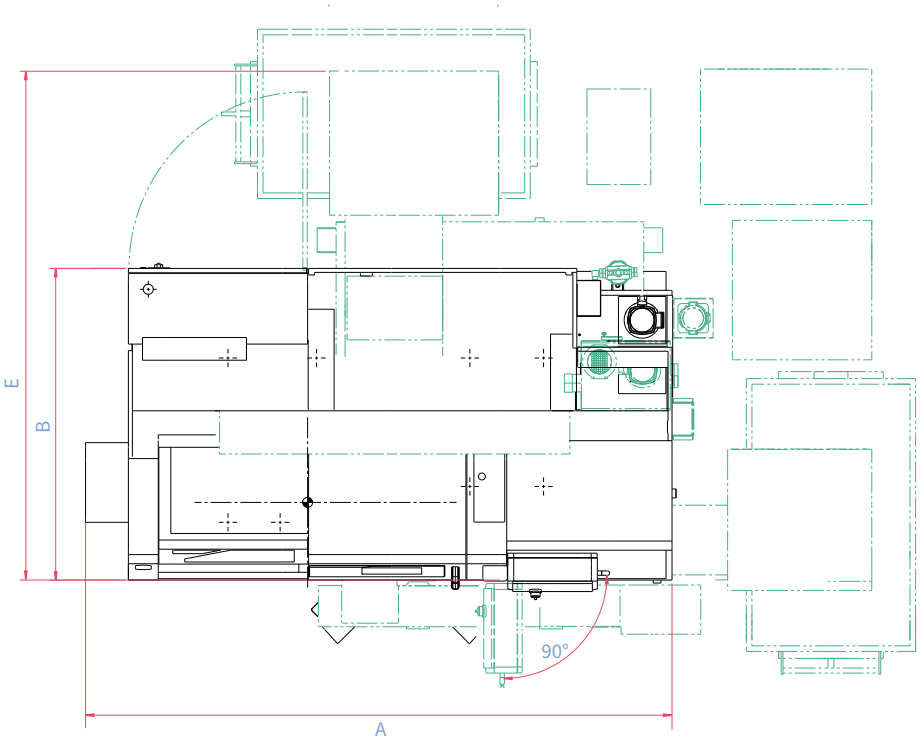

FRONT

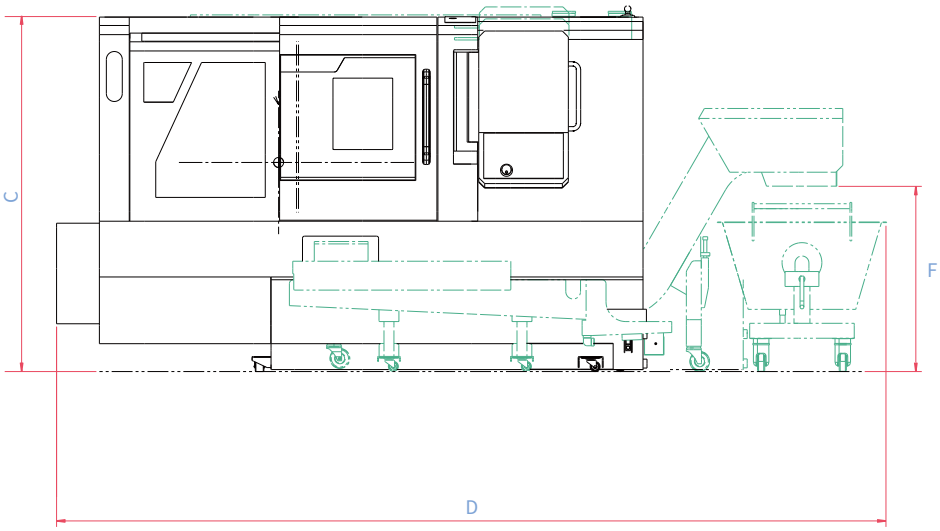

Units : mm (inch)

Model	A (Length)	B (Width)	C (Height)	D (Length with side type chip conveyor)	E (Width with rear type chip conveyor)	F (Height of chip outlet)**
PUMA DNT2100/B	2945 (115.9)	1664 (65.5)	1780 (70.1)	4165 (164.0)	2654 (104.5)	930 (36.6)
PUMA DNT2600	3355 (132.1)	1729 (68.1)	1780 (70.1)	4363 (171.8)	2897 (114.1)	918 (36.1)
PUMA DNT2600L	3800 (149.6)	1839 (72.4)	1780 (70.1)	4915 (193.5)	-	918 (36.1)

** Some peripheral equipment can be placed in other places.*

TOOLING SYSTEM

PUMA DNT2100/B_2axis

Units : mm (inch)

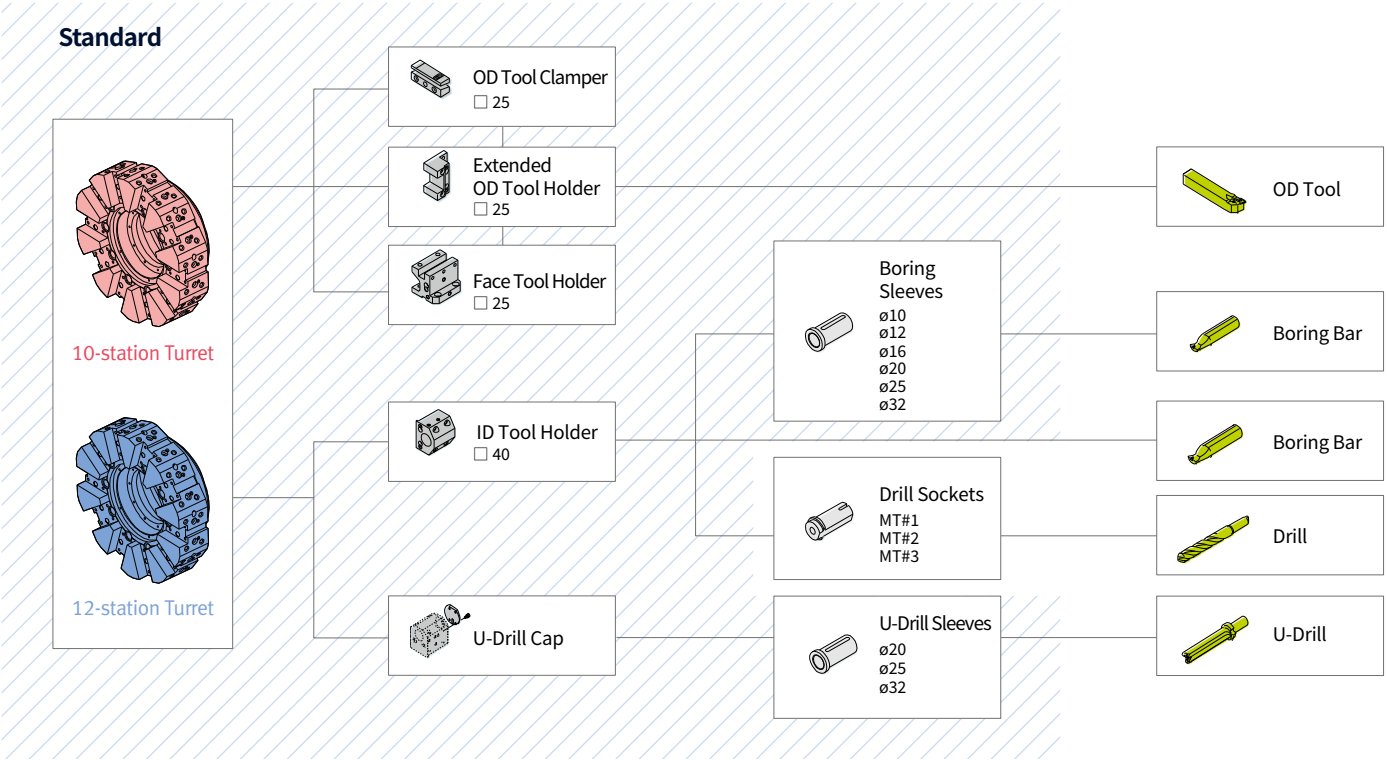

PUMA DNT2600/L_2axis

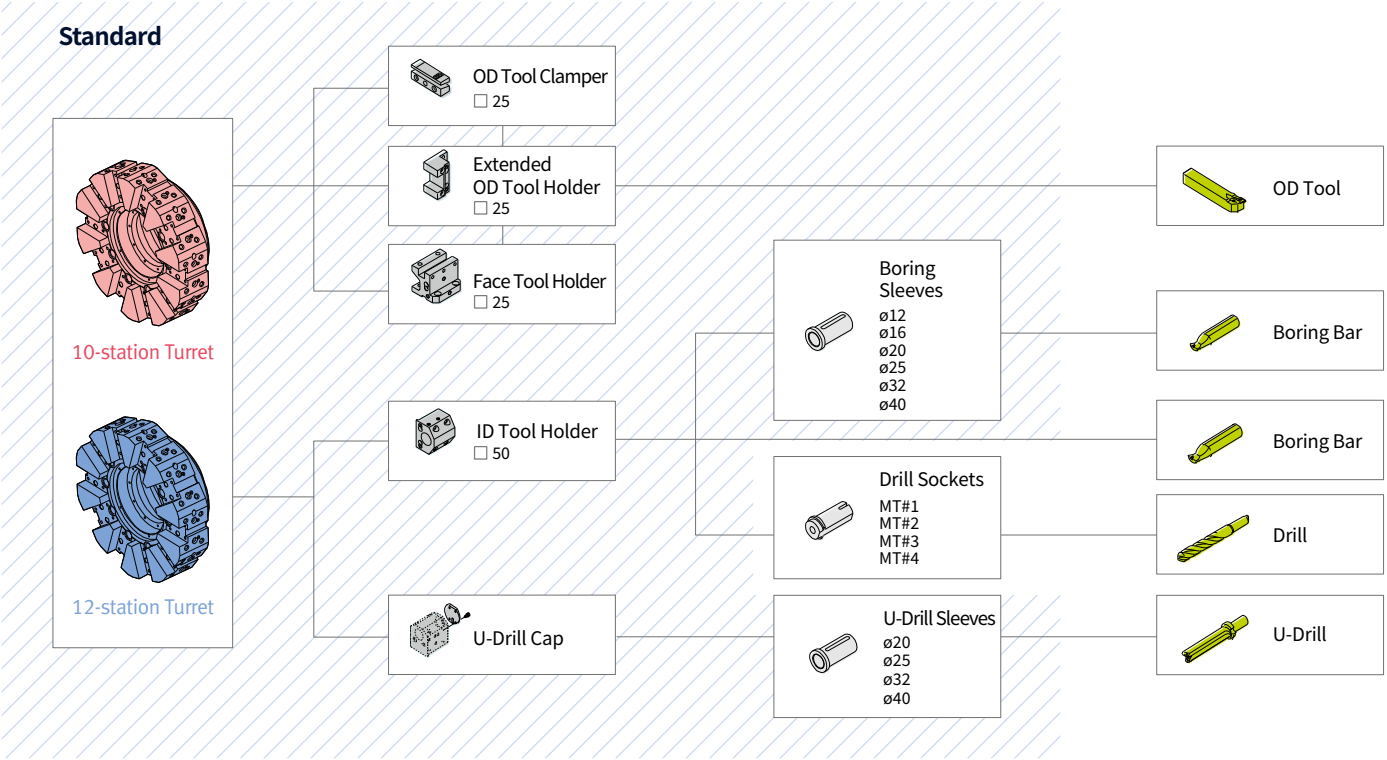

TOOLING SYSTEM

PUMA DNT2100M/MB, 2600M/LM_12ST BMT55P/BMT65P

Units : mm (inch)

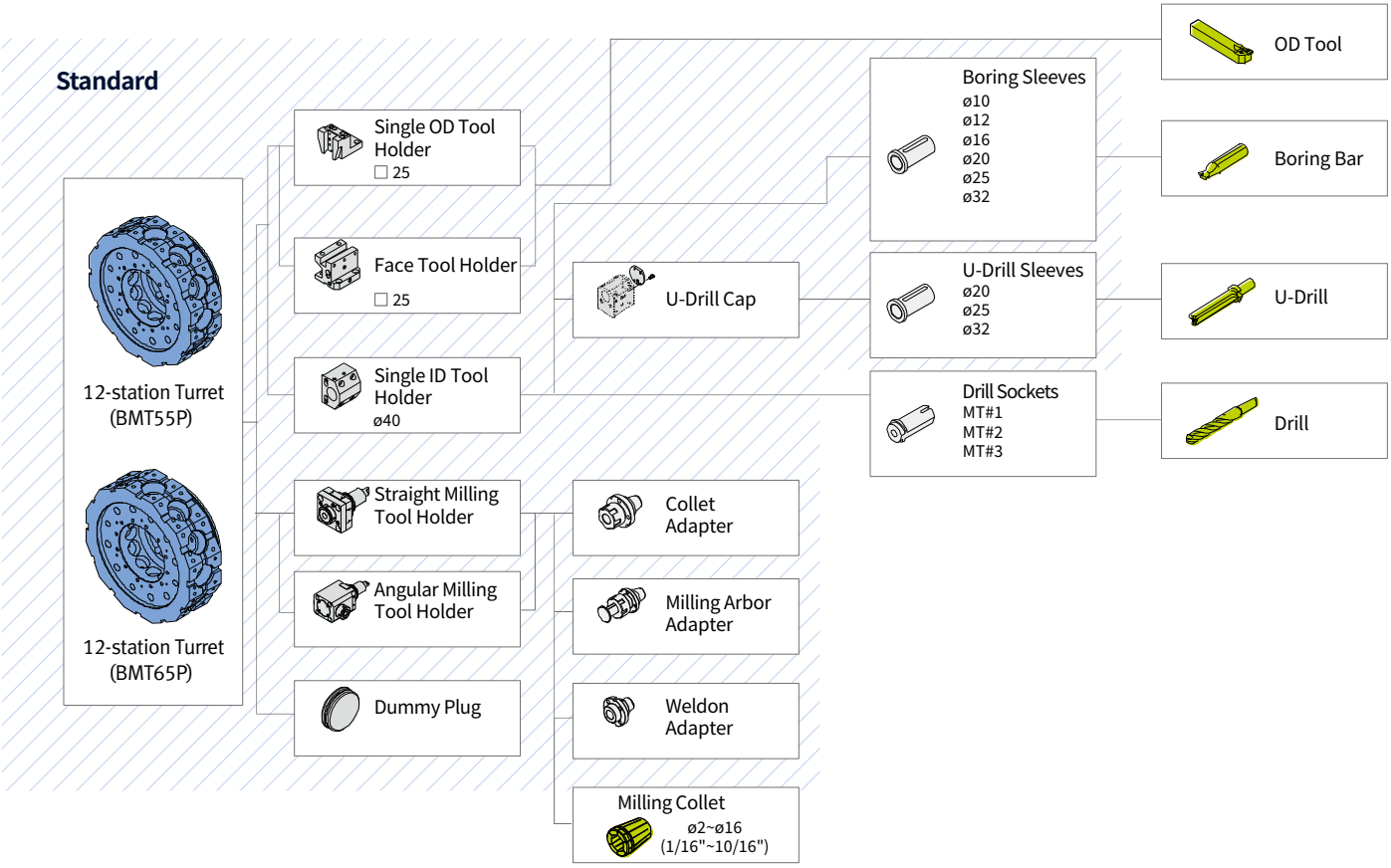

PUMA DNT2100M/MB, 2600M/LM_12ST(24 POSITION) BMT55P

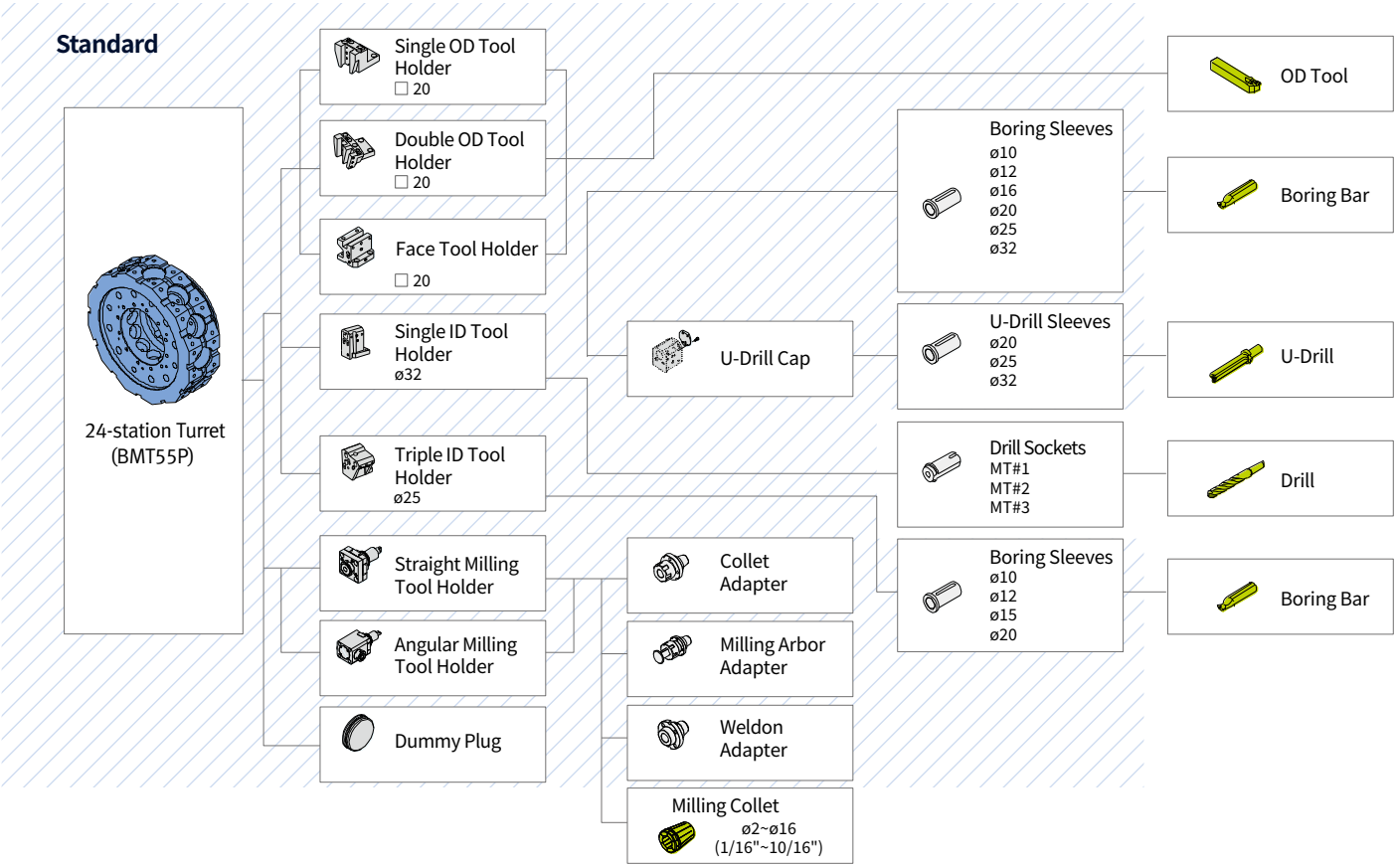

TOOL INTERFACE

PUMA DNT2100 / B

Units : mm (inch)

12 station

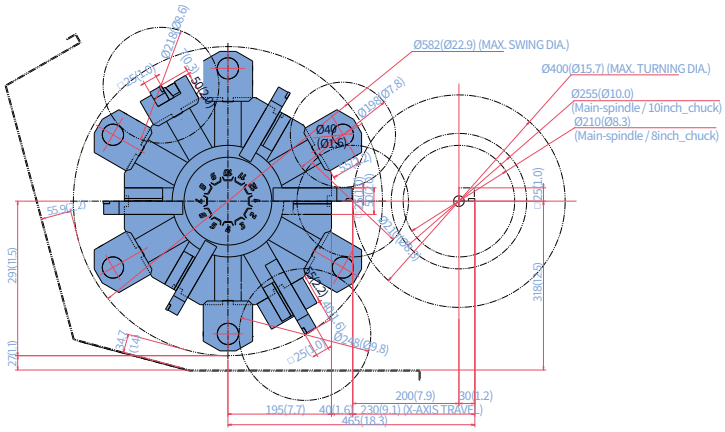

*PUMA DNT2100 : Standard, PUMA DNT2100B : Option

10 station

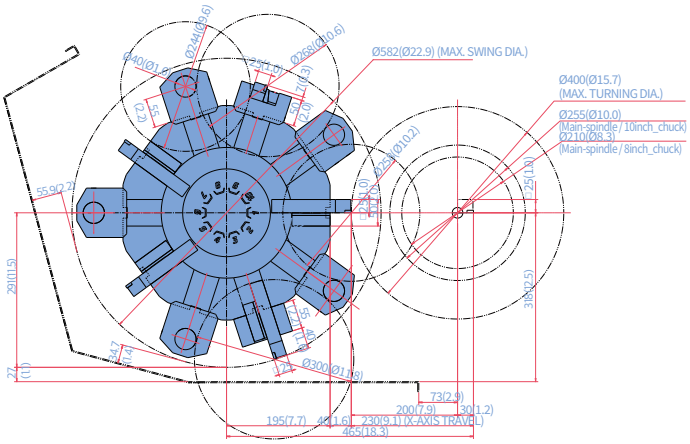

*PUMA DNT2100 : Option, PUMA DNT2100B : Standard

PUMA DNT2100M/MB

12 station_BMT55P

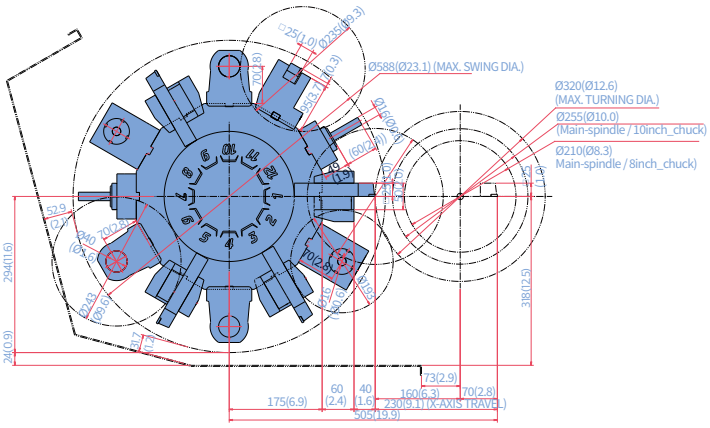

12 station_BMT65P OPTION

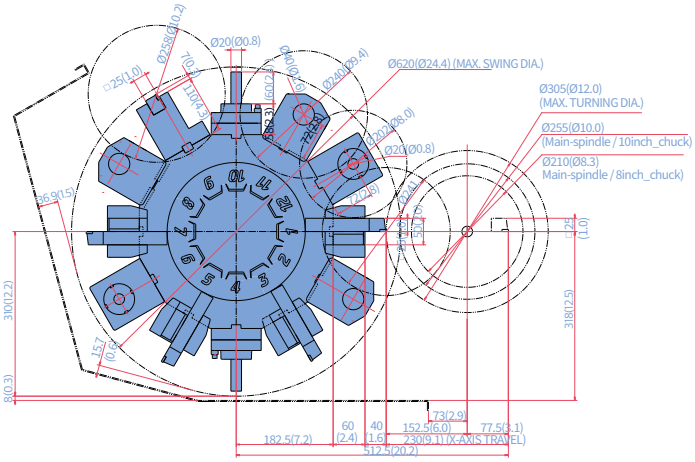

TOOL INTERFACE

PUMA DNT2600/L

Units : mm (inch)

10-station

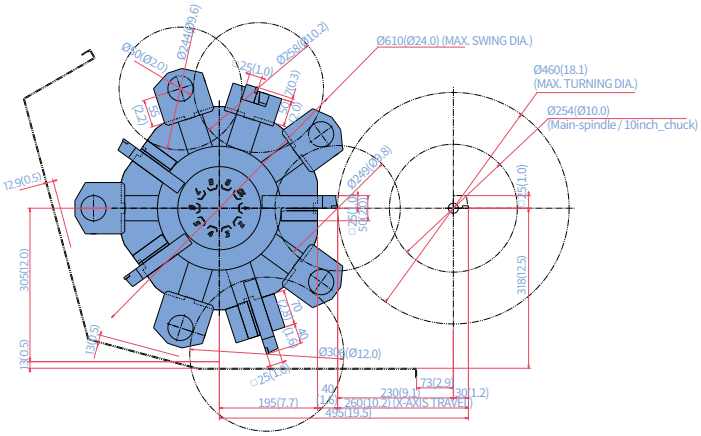

12-station OPTION

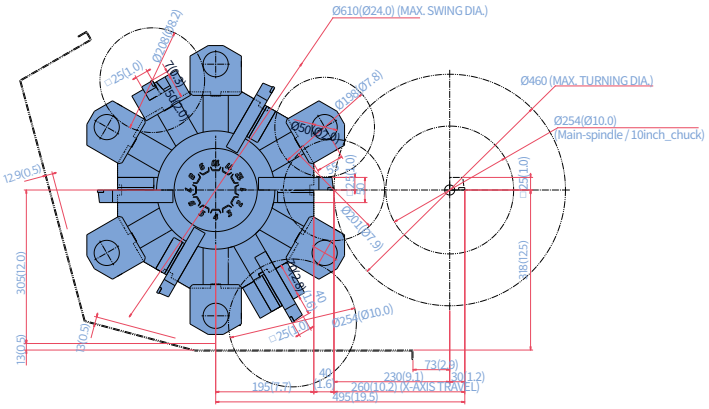

**PUMA DNT2100 : Standard, PUMA DNT2100B : Option*

PUMA DNT2600M/LM

12-station BMT55P

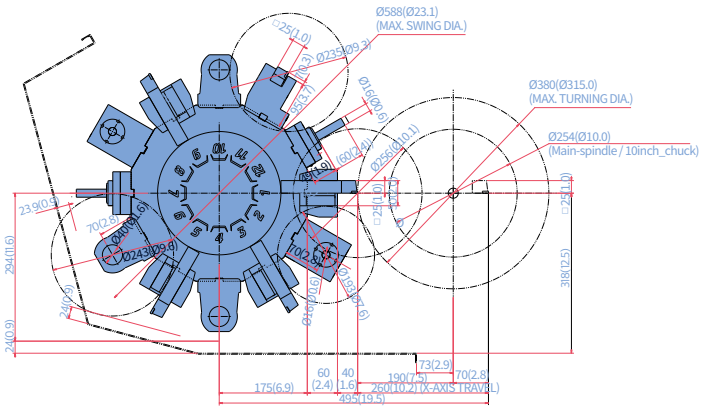

12-station BMT65P OPTION

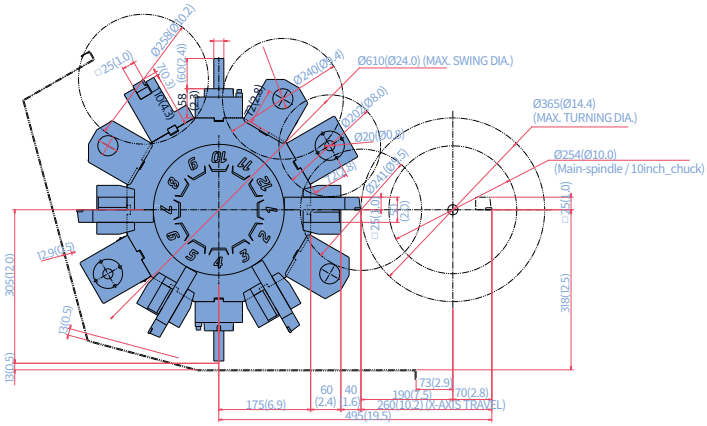

WORKING RANGE

PUMA DNT2100/B · 2600/L(2-axis)

Units : mm (inch)

OD CLAMPER

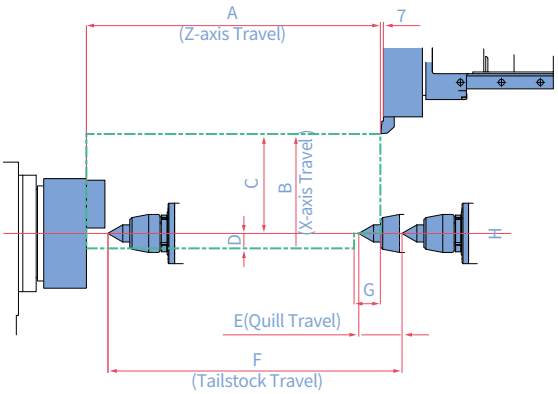

Model	A	B	C	D	E	F	G	H
PUMA DNT2100	580 (22.8)	230 (9.1)	200 (7.9)	30 (1.2)	100 (3.9)	580 (22.8)	40 (1.6)	-10 (-0.4)
PUMA DNT2100B								
PUMA DNT2600	680 (26.8)	260 (10.2)	230 (9.1)	30 (1.2)	100 (3.9)	680 (26.8)	60 (2.4)	-15 (-0.6)
PUMA DNT2600L	1100 (43.3)					1100		

ID HOLDER

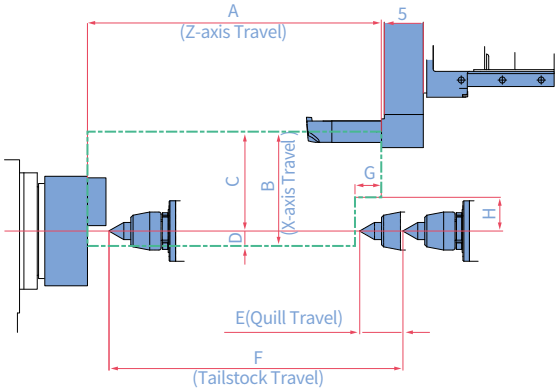

Model	A	B	C	D	E	F	G	H
PUMA DNT2100	580 (22.8)	230 (9.1)	185 (7.3)	45 (1.8)	100 (3.9)	580 (22.8)	45 (1.8)	35 (1.4)
PUMA DNT2100B								
PUMA DNT2600	680 (26.8)	260 (10.2)	215 (8.5)	45 (1.8)	100 (3.9)	680 (26.8)	75 (3.0)	75 (3.0)
PUMA DNT2600L	1100 (43.3)					1100		

EXTENDED OD HOLDER

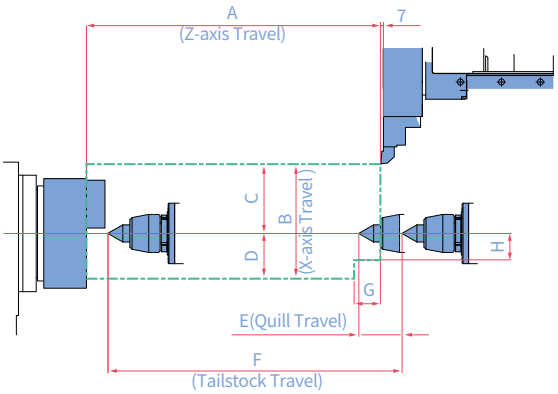

Model	A	B	C	D	E	F	G	H
PUMA DNT2100	580 (22.8)	230 (9.1)	145 (5.7)	85 (3.3)	100 (3.9)	580 (22.8)	40 (1.6)	-65 (-2.6)
PUMA DNT2100B								
PUMA DNT2600	680 (26.8)	260 (10.2)	160 (6.3)	100 (3.9)	100 (3.9)	680 (26.8)	70 (2.8)	-30 (-1.2)
PUMA DNT2600L	1100 (43.3)					1100		

FACE TOOL HOLDER

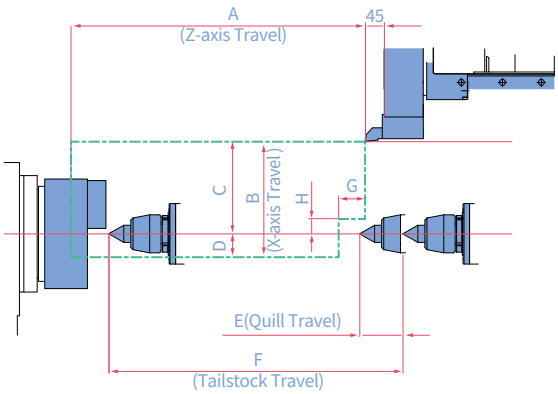

Model	A	B	C	D	E	F	G	H
PUMA DNT2100	580 (22.8)	230 (9.1)	183 (7.2)	47 (1.9)	100 (3.9)	580 (22.8)	25 (1.0)	-47 (-1.9)
PUMA DNT2100B								
PUMA DNT2600	680 (26.8)	260 (10.2)	213 (8.4)	47 (1.9)	100 (3.9)	680 (26.8)	70 (2.8)	20 (0.8)
PUMA DNT2600L	1100 (43.3)					1100 (43.3)		

∗ for H : (-) Downward direction of spindle center line / (+) Upward direction of spindle center line

WORKING RANGE

PUMA DNT2100M/2100MB · 2600M/LM

Units : mm (inch)

OD HOLDER

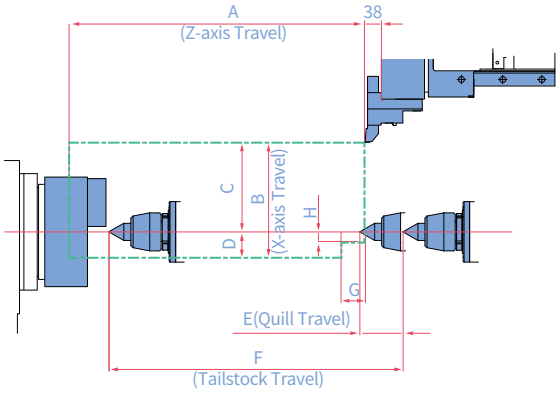

Model	A	B	C	D	E	F	G	H
PUMA DNT2100	580 (22.8)	230 (9.1)	160 (6.3)	70 (2.8)	100 (3.9)	580 (22.8)	0	0
PUMA DNT2100B								
PUMA DNT2600	680 (26.8)	260 (10.2)	190 (7.5)	70 (2.8)	100 (3.9)	680 (26.8)	75 (3.0)	-40 (-1.6)
PUMA DNT2600L	1100 (43.3)					1100 (43.3)		

ID HOLDER

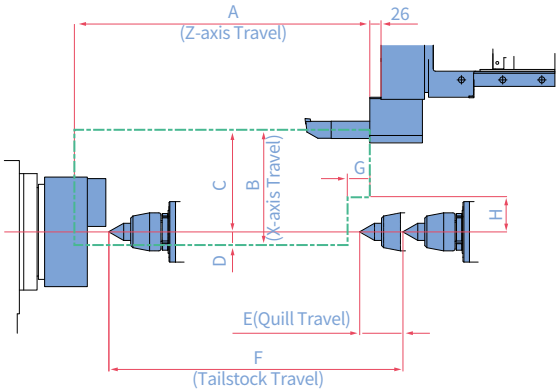

Model	A	B	C	D	E	F	G	H
PUMA DNT2100	580 (22.8)	230 (9.1)	190 (7.5)	40 (1.6)	100 (3.9)	580 (22.8)	15 (0.6)	40 (1.6)
PUMA DNT2100B								
PUMA DNT2600	680 (26.8)	260 (10.2)	220 (8.7)	40 (1.6)	100 (3.9)	680 (26.8)	55 (2.2)	60 (2.4)
PUMA DNT2600L	1100 (43.3)					1100 (43.3)		

FACE TOOL HOLDER

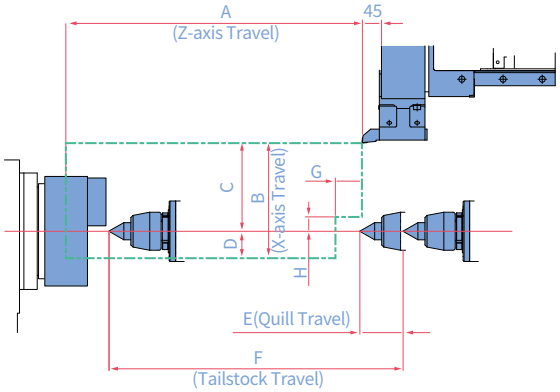

Model	A	B	C	D	E	F	G	H
PUMA DNT2100	580 (22.8)	230 (9.1)	158 (6.2)	72 (2.8)	100 (3.9)	580 (22.8)	10 (0.4)	5 (0.2)
PUMA DNT2100B								
PUMA DNT2600	680 (26.8)	260 (10.2)	188 (7.4)	72 (2.8)	100 (3.9)	680 (26.8)	50 (2.0)	20 (0.8)
PUMA DNT2600L	1100 (43.3)					1100		

STRAIGHT MILLING HOLDER

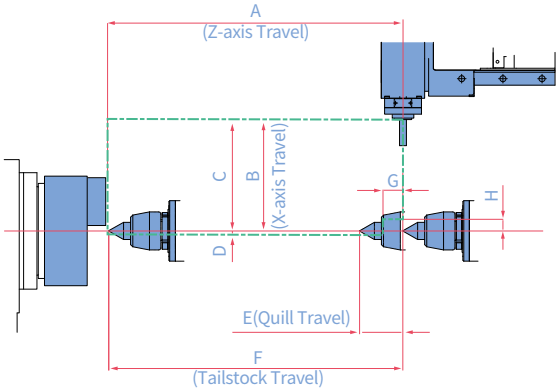

Model	A	B	C	D	E	F	G	H
PUMA DNT2100	580 (22.8)	230 (9.1)	214 (8.4)	16 (0.6)	100 (3.9)	580 (22.8)	0	0
PUMA DNT2100B								
PUMA DNT2600	680 (26.8)	244 (9.6)	16 (0.6)	47 (1.9)	100 (3.9)	680 (26.8)	40 (1.6)	15 (0.6)
PUMA DNT2600L	1100 (43.3)					1100 (43.3)		

ANGULAR MILLING HOLDER

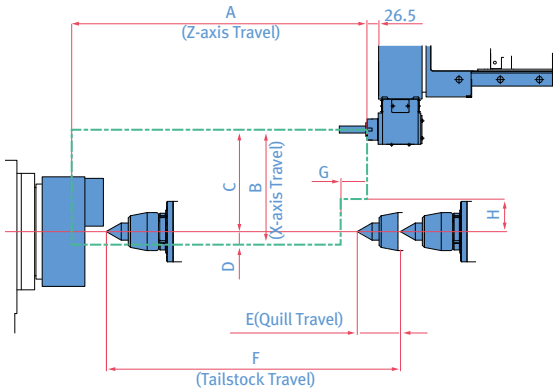

Model	A	B	C	D	E	F	G	H
PUMA DNT2100	580 (22.8)	230 (9.1)	190 (7.5)	40 (1.6)	100 (3.9)	580 (22.8)	5 (0.2)	40 (1.6)
PUMA DNT2100B								
PUMA DNT2600	680 (26.8)	260 (10.2)	220 (8.7)	40 (1.6)	100 (3.9)	680 (26.8)	70 (2.8)	60 (2.4)
PUMA DNT2600L	1100 (43.3)					1100 (43.3)		

∗ for H : (-) Downward direction of spindle center line / (+) Upward direction of spindle center line

** This working range is based on BMT55P/12ST. For more the detailed information of 12ST(24 position)/BMT55P, 12ST/BMT65P, please contact sales person*

MACHINE SPECIFICATIONS

Description			Unit	PUMA DNT 2100	PUMA DNT 2100M	PUMA DNT 2100B	PUMA DNT 2100MB	PUMA DNT 2600 [L]	PUMA DNT 2600M [LM]
Capacity	Swing over bed		mm (inch)	650 (25.6)		650 (25.6)		650 (25.6)	
	Swing over saddle		mm (inch)	460 (18.1)		460 (18.1)		460 (18.1)	
	Recommanded turning dia.		mm (inch)	210 (8.3)		255 (10.0)		255 (10.0)	
	Max. turning dia.		mm (inch)	400 (15.7)	320 (12.6) (BMT55P) 305 (12.0) (BMT65P)	400 (15.7)	320 (12.6) (BMT55P) 305 (12.0) (BMT65P)	460 (18.1)	380 (15.0) (BMT55P) 365 (14.4) (BMT65P)
	Max turning length		mm (inch)	562 (22.1)	513 (20.2) (BMT55P) 506 (188.0) (BMT65P)	550 (21.7)	501 (19.7) (BMT55P) 494 (19.4) (BMT65P)	658 (25.9) [1078 (42.4)]	610 (24.0) [1030 (188.0)] (BMT55P) 603 (188.0) [1023 (40.3)] (BMT65P)
	Chuck size		inch	8 {10}		10		10 {12}	
	Bar working dia.		mm (inch)	67 (2.6)		81 (3.2)		81 (3.2)	
Travels	Travel distance	X-axis	mm (inch)	230 (9.1)		230 (9.1)		260 (10.2)	
		Z-axis	mm (inch)	580 (22.8)		580 (22.8)		680 (26.8) [1100 (43.3)]	
Feedrates	Rapid traverse rate	X-axis	m/min (ipm)	24 (944.9)		24 (944.9)		24 (944.9)	
		Z-axis	m/min (ipm)	30 (1181.1)		30 (1181.1)		30 (1181.1)	
Main spindle	Max. spindle speed		r/min	4500 {High torque 4000, Built-in 5000}		3500		3500	
	Main spindle motor power		kW (Hp)	18.5 / 15 / 15 (24.8 / 20.1 / 20.1) (S6 25% / S6 40% / S1 Cont.)		18.5 / 15 / 15 (24.8 / 20.1 / 20.1) (S6 25% / S6 40% / S1 Cont.)		26 / 22 / 18.5 (34.9/ 29.5 / 24.8) (S6 25% / S6 60% / S1 Cont.)	
	Max. spindle torque		N·m (lbf-ft)	328 (242.1) {High torque 378(279.0), Built-in 326(240.6)}		403 (297.4)		735 (542.4)	
	Spindle nose		ASA	A2-6		A2-8		A2-8	
	Spindle bearing diameter (Front)		mm (inch)	110 (4.3)		130 (5.1)		130 (5.1)	
	Spindle through hole		mm (inch)	76 (188.0)		91 (3.6)		91 (3.6)	
	Min. spindle Indexing angle (C-axis)		deg	-	0.001	-	0.001	-	0.001
Turret	No. of tool stations		ea	12		10 {12}	12	10 {12}*	12
	OD tool size		mm (inch)	25 x 25 (1.0 x 1.0)		25 x 25 (1.0 x 1.0)		25 x 25 (1.0 x 1.0)	
	Max. boring bar size		mm (inch)	Ø40 (Ø1.6)		Ø40 (Ø1.6)		Ø50 (Ø2.0)	Ø40 (Ø1.6)
	Turret Indexing time (1 station swivel)		s	0.15		0.15		0.15	
	BMT55P		-	-	6000 r/min 5.5 kW (7.4 Hp)	-	6000 r/min 5.5 kW (7.4 Hp)	-	6000 r/min 5.5 kW (7.4 Hp)
	BMT55P		-	-	10000 r/min 7.5 kW (10.1 Hp)	-	10000 r/min 7.5 kW (10.1 Hp)	-	10000 r/min 7.5 kW (10.1 Hp)
	BMT65P		-	-	5000 r/min 5.5 kW (7.4 Hp)	-	5000 r/min 5.5 kW (7.4 Hp)	-	5000 r/min 5.5 kW (7.4 Hp)
Tailstock	Tailstock travel		mm (inch)	580 (22.8)		580 (22.8)		680 (26.8) [1100 (43.3)]	
	Quill diameter		mm (inch)	80 (3.1)		80 (3.1)		100 (3.9)	
	Quill travel		mm (inch)	100 (3.9)		100 (3.9)		100 (3.9)	
	Quill bore taper		MT	MT#4 {#3(Dead)}*		MT#4 {#3(Dead)}*		MT#5 {#4(Dead)}*	
Power source	Electric power supply (rated capacity)		kVA	31.14		31.14		34.53	
Machine dimensions	Length		mm (inch)	2945 (115.9) {Built-in 2760(108.7)}		2945 (115.9)		3355 (132.1) [3800 (149.6)]	
	Width		mm (inch)	1664 (65.5)		1664 (65.5)		1729 (68.1) [1839 (72.4)]	
	Height		mm (inch)	1780 (70.1)		1780 (70.1)		1780 (70.1)	
	Weight		kg (lbf)	3700 (8157.0)	3800 (8377.4)	3800 (8377.4)	3900 (8597.9)	4300 [4900] (9479.7 [10802.5])	4350 [4950] (9590.0 [10912.7])
Control	NC system			DN Solutions Fanuc i Plus					

** BMT55P's specification. (BMT65P : 12ST / 5,000r/min / 5.5kW) * { } : option*

WHY DN SOLUTIONS

The DN Solutions promise, MACHINE GREATNESS, has two important meanings. The first is simple: DN Solutions makes great machines. The second is a challenge to our end-users. With a product line that is this comprehensive, accurate and reliable, we equip our customers to machine greatness. **The big question:** ***Why should you choose DN Solutions over other options?***

Here's why…

WHAT YOU MAKE AND HOW YOU MAKE IT MATTERS—SO MAKE IT GREAT WITH DN SOLUTIONS.

UNBEATABLE MACHINES

You won't find a more comprehensive range or a better combination of value, performance and reliability anywhere else.

READILY AVAILABLE - ANYWHERE IN THE WORLD

Machining centers (including 5-axis machines), lathes, multi-tasking turning centers and mill-turn machines, and horizontal borers with best-in-class specifications are all available…ready to install.

ROBUST PRODUCT LINE

We offer an impressive range of machine models and hundreds of configurations. Whatever your machining needs and requirements, there's a DN Solutions for you.

EXPERT SERVICE

Our dedicated, experienced and knowledgeable team is totally committed to improving your productivity, growth and success.

RESPONDING TO CUSTOMERS
ANYTIME, ANYWHERE

DN Solutions Global Network

DN Solutions provides systems-based professional support services, before and after the machine tool sale, by responding quickly and efficiently to customers. By supplying spare parts, product training, field service and technical support, we provide the expert care, attention and assistance our customers expect from a market leader.

Global sales and service support network		51	Technical centers Technical center, Sales support, Service support, Parts support
4	Corporations	200	Service posts
155	Dealer networks	3	Factories

CUSTOMER SUPPORT AND SERVICES

We're there for you whenever you need us.

We help our customers operate at maximum efficiency by providing them with a range of tried, tested and trusted services - from pre-sales consultancy to post-sales support.

Field services

- On-site service
- Machine installation and testing
- Scheduled preventive maintenance
- Machine repair service

Parts supply

- Supplying a wide range of original DN Solutions spare parts
- Parts repair service

Training

- Programming, machine setup and operation
- Electrical and mechanical maintenance
- Applications engineering

Technical support

- Supports machining methods and technology
- Responds to technical queries
- Provides technical consultancy

dn-solutions.com

Head Office
19F, 10, Tongil-ro, Jung-gu
Seoul, Republic of Korea, 04527
Tel: +82-2-6972-0370/0350
Fax:+82-2-6972-0400

DN Solutions America
19A Chapin Road, Pine Brook
New Jersey 07058, United States
Tel: +1-973-618-2500
Fax:+1-973-618-2501

DN Solutions Europe
Emdener Strasse 24, D-41540
Dormagen, Germany
Tel: +49-2133-5067-100
Fax:+49-2133-5067-111

DN Solutions India
No.82, Jakkuar Village
Yelahanka Hobil, Bangalore-560064
Tel: + 91-80-2205-6900
E-mail: india@dncompany.com

DN Solutions China
Room 101,201,301, Building 39 Xinzhuan
Highway No.258 Songjiang District
China Shanghai (201612)
Tel: +86 21-5445-1155
Fax:+86 21-6405-1472

Sales inquiry
sales@dncompany.com

* For more details, please contact DN Solutions.

* Specifications and information contained within this catalogue may be changed without prior notice.

DN SOLUTIONS

ver. EN 230912 SU